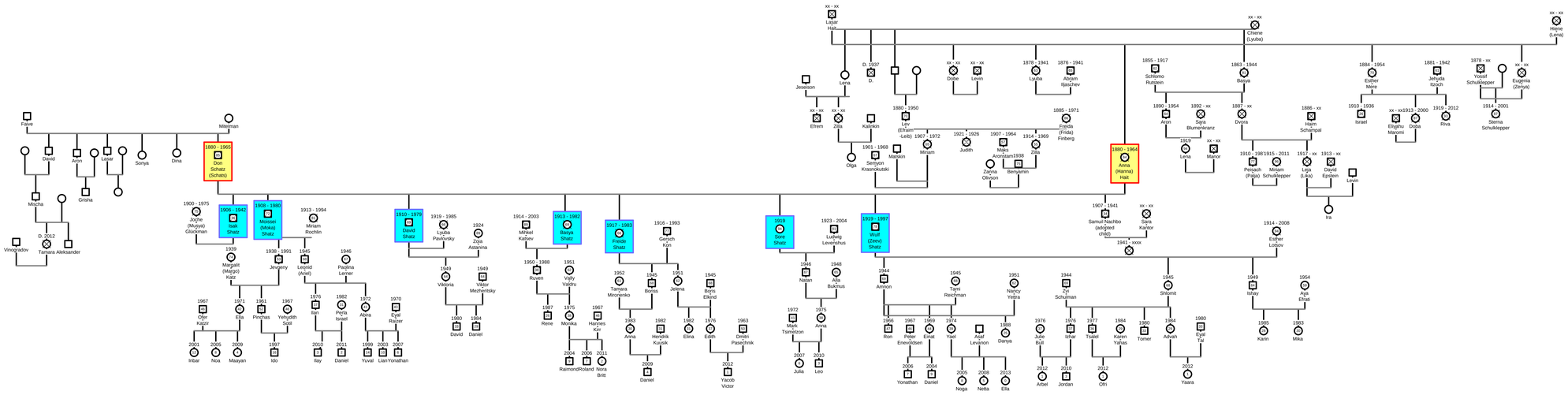
Faive
Miselman
David
Aron
Lazar
Sonya
Dina
Mischa
Grisha
D. 2012
Tamara Aleksander
Vinogradov
1880 - 1965
Dov
Schatz
(Schatz)
1900 - 1975
Joyce
(Mugya)
Glückman
1906 - 1947
Isak
Schatz
1908 - 1980
Moisiai
(Moka)
Schatz
1913 - 1994
Miriam
Rochlin
1939
Margalit
(Margo)
Katz
1938 - 1991
Jevgeny
1945
Leonid
(Arel)
1946
Paqlina
Lerner
1967
Ofer
Katzir
2001
Ohlar
1971
Etta
2005
Noa
1991
Pinchas
2009
Maayan
1987
Yehudith
Sotl
1997
Ido
1976
Ilan
2010
Ilay
1982
Perla
Israel
2011
Daniel
1972
Abna
1999
Yuval
2001
Liam
1970
Egal
Razcer
2007
Yonathan
1910 - 1979
Dovid
Schatz
1919 - 1985
Lyubia
Pavlovsky
1924
Zoya
Astahova
1949
Victoria
1949
Viktor
Mezhenitsky
1980
David
1984
Daniel
1914 - 2003
Mikhel
Kaltiev
1913 - 1982
Basya
Schatz
1959 - 1988
Ruven
1951
Vaily
Vasiru
1987
Rene
1975
Monika
1967
Hannes
Kir
2004
Raimond
2008
Roland
2011
Nora
Britt
1917 - 1983
Frida
Schatz
1916 - 1993
Gersh
Kon
1952
Tamara
Mironenko
1945
Boriss
1951
Jelena
1960
Anna
1992
Hendrik
Kucuk
2009
Daniel
1945
Boris
Elkind
1960
Elina
1976
Edith
1963
Dmitri
Pasechnik
2012
Yacob
Victor
1910
Sore
Schatz
1923 - 2004
Ludwig
Levenhus
1946
Natan
1948
Ada
Bukrinus
1972
Mark
Tsirnelzon
1976
Anna
2007
Julia
2010
Leo
1919 - 1997
Wolf
(Zeev)
Schatz
1944
Amnon
1945
Tami
Reichman
1951
Nancy
Yeltra
1966
Ron
1987
Peter
Enevoldsen
1969
Einat
1974
Yael
Agat
Levanon
1988
Danya
2006
Yonathan
2004
Daniel
2005
Noga
2008
Netta
2013
Ella
1944
Zvi
Schulman
1976
Julie
Bull
2012
Arbel
1976
Izhar
2010
Jordan
1977
Tsalel
2012
Ofri
1984
Karen
Yanas
1990
Tomer
1964
Adnan
2012
Yaara
1980
Eytel
Tal
1965
Shlomit
1949
Ishay
1985
Karin
1964
Agit
Efrat
1983
Mika
1907 - 1941
Samuel Nachbo
(adopted
child)
xx - xx
Sara
Kahlor
1941 - xxxx
1914 - 2008
Esther
Lotsov
xx - xx
Lazar
Halt
xx - xx
Chiene
(Lydia)
xx - xx
Meine
(Lena)
Jeseson
Lena
D. 1937
D.
xx - xx
Ehem
xx - xx
Zisa
Kalinkin
Olga
1901 - 1968
Sergeyn
Krasnokutski
1880 - 1950
Lev
(Eliam
-Leib)
Matukin
1907 - 1972
Miriam
xx - xx
Dobe
xx - xx
Levin
1921 - 1926
Judith
1907 - 1964
Moks
Aronstam
1938
Zahna
Olivion
Benjamin
1914 - 1969
Zila
1878 - 1941
Lydia
1876 - 1941
Abram
Ilaschev
1885 - 1971
Frida
(Frida)
Finberg
1880 - 1964
Anna
(Hanna)
Halt
1855 - 1917
Schlomo
Rubtsein
1890 - 1954
Aron
1892 - xx
Sara
Blumenkranz
1919
Lena
xx - xx
Manor
1869 - 1944
Baisya
1887 - xx
Dvora
1910 - 1986
Peisach
(Pisia)
1915 - 2011
Miriam
Schulklepper
1886 - xx
Ham
Schampal
1907 - xx
Liga
(Lika)
1912 - xx
David
Epstein
Levin
Ira
1884 - 1954
Esther
Mine
1910 - 1936
Israel
xx - xx
Elisgho
Maromi
1913 - 2000
Doba
1881 - 1942
Jehyda
Itzoch
1919 - 2012
Riva
1878 - xx
Yossif
Schulklepper
1914 - 2001
Sterna
Schulklepper
xx - xx
Eugenia
(Zenyia)